

CORVEX
INDUSTRIAL

PEOPLE & TRAINING · HB-ASM-01

New assembler onboarding handbook

Your first 90 days on the CX compressor line. Dayton, OH and Wrocław, PL.

WELCOME

Welcome to Corvex

Every Corvex compressor that leaves our plants keeps a factory, a hospital or a workshop running. Some of them will run for twenty years. The people who build them are the reason they last, and as of today, that includes you.

This handbook walks you through your first 90 days: who we are, how the line works, how we keep each other safe and how you become a certified assembler. Read it in your first week, keep it at your station, and ask your shift lead about anything that is not clear.

We have one promise we make to every new person here: you will never be asked to do a job you have not been trained for, and you will never be blamed for stopping a job that looks unsafe.

Marcus Oyelaran
Plant Manager, Dayton

> **HOW TO USE THIS HANDBOOK**
>
> Each chapter ends with what you must be able to do before you move on. Your buddy signs it off on the checklist on the last page. Policies in this handbook point to the full SOPs; the SOP always wins if the two ever disagree.

What is inside

1. Corvex and how a compressor works
2. Your first week
3. People, shifts and your buddy
4. Safety on the shop floor
5. Lockout/tagout
6. The CX assembly line
7. Tools and torque
8. Quality checks
9. The test bay
10. 5S at your station
11. Reporting and the Corvex Safety app
12. Your certification path
13. Glossary and sign-off

CHAPTER 1

Corvex and how a compressor works

Corvex Industrial designs and builds rotary screw air compressors from 30 to 110 kW. We have two plants: Dayton, Ohio (founded 1987, 410 people) and Wrocław, Poland (opened 2014, 240 people). Both plants build the same CX range to the same drawings and the same SOPs.

650	2	3	11,000
people	plants	models: CX-55, CX-75, CX-110	units a year

How a rotary screw compressor works

Air is drawn in through the inlet valve and filter. Inside the **airend**, two meshing screw rotors, the male and the female, trap the air and squeeze it into a smaller and smaller space as they turn. Oil is injected to seal the gaps, cool the air and lubricate the rotors.

The compressed air and oil leave the airend together and go into the separator tank, where the oil is spun out and returned. The air passes through the aftercooler and leaves the unit at up to 13 bar (190 PSI). An electric **motor**, linked to the airend by a flexible **coupling**, drives the rotors.

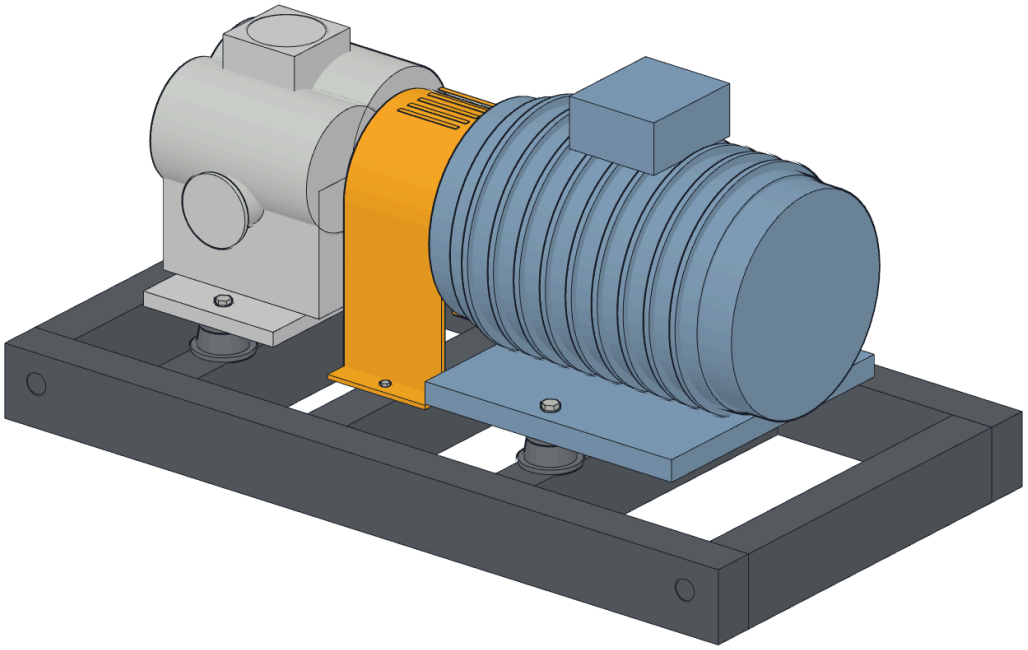

The CX-75 drive train: airend (left), coupling under the amber guard, 75 kW motor (right), on its base frame.

BY THE END OF THIS CHAPTER YOU CAN

Name the airend, motor, coupling and separator, and say in one sentence what each one does.

CHAPTER 2

Your first week

Your first week is about learning, not output. Nobody expects you to build a unit on your own yet. You spend most of it next to your buddy, watching first and then doing with them.

Day	Morning	Afternoon
Monday	Badge, locker, PPE fitting. Plant tour with EHS.	Safety induction (Module 1). Meet your shift lead and buddy.
Tuesday	Lockout/tagout training and practical test.	Shadow your buddy at Station 1, frame prep.
Wednesday	Tools and torque: torque wrench practical.	Shadow at Station 2, drive train.
Thursday	Quality checks and defect tags.	Assemble a drive train with your buddy.
Friday	Test bay walk-through.	Week review with your shift lead. Sign off chapters 1 to 5.

What to bring

- Your safety shoes (or collect them from stores on Monday, we pay)
- Photo ID for your badge
- Bank details for payroll, if you have not sent them yet

Where to go on day one

Come to the main reception at 06:45 for the early shift or 14:45 for the late shift. EHS will meet you there. Park in the north car park; it is also Assembly Point A.

> **BY THE END OF YOUR FIRST WEEK YOU CAN**
>
> Find your station, your locker, the nearest exits, first aid and eyewash, and Assembly Point A without help.

CHAPTER 3

People, shifts and your buddy

Shifts

Shift	Hours	Breaks
Early	07:00 to 15:30	10:00 (15 min), 12:00 (30 min)
Late	15:00 to 23:30	18:00 (15 min), 20:00 (30 min)

Shift handover happens at the line board 15 minutes before the end of each shift. The outgoing shift lead walks the incoming one through open defects, missing parts and anything unsafe.

Who to ask

Role	Ask them about
Your buddy	Everything, first. An experienced assembler who works next to you for your first 30 days.
Shift lead	Your work for the shift, missing parts, defects, holidays, anything unsafe.
Quality engineer	Defect tags, drawings that don't match the part.
EHS team	Safety questions, PPE, near misses, first aid.
People team	Pay, contracts, training records.

The buddy system

For your first 30 days you never work alone. Your buddy shows you each job, then watches you do it, then signs it off. If your buddy is away, your shift lead names a stand-in before the shift starts.

> **BY THE END OF THIS CHAPTER YOU CAN**
>
> Name your buddy, your shift lead and your EHS contact, and say when and where handover happens.

CHAPTER 4

Safety on the shop floor

Dayton has gone 412 days without a lost-time injury. That record belongs to everyone on the floor, and it holds because of a few simple habits.

PPE by zone

Zone	Required PPE
Assembly line	Safety glasses, safety shoes, cut-resistant gloves
Test bays	All of the above + hearing protection (noise over 85 dB)
Paint booth	All of the above + fitted respirator, fit-tested every year

Floor markings

- **Solid yellow:** walkways. Stay inside them.
- **Amber and black:** forklift lanes and hazards. Cross only at crossings.
- **Red:** fire equipment. Keep 1 m clear.
- **Green:** first aid and eyewash stations.

Forklifts

Make eye contact with the driver before you cross. Keep 3 m from a moving forklift. Never walk under a raised load.

Four hazards on the CX line

- **Pinch points:** hands out of the airend mount while it is lowered.
- **Compressed air:** never point an air gun at skin or clothes.
- **Hot surfaces:** test-bay units reach 95 °C. Wait, then check.
- **Heavy parts:** over 23 kg, use the hoist or a team lift.

> **STOP-WORK AUTHORITY**
>
> Anyone at Corvex, on their first day or their thirtieth year, can stop a job that looks unsafe. Nobody is ever blamed for it.

CHAPTER 5

Lockout/tagout

A compressor that is switched off is not safe. The receiver tank and separator can hold air at up to 13 bar, and the airend can restart automatically. Before anyone services a unit, it is locked out following **SOP-MNT-014**.

The short version

1. Tell the shift lead and everyone nearby.
2. Stop the unit at the panel and let it unload.
3. Open the main disconnect and set the controller to LOCAL.
4. Put your own lock and tag on the disconnect. One person, one lock.
5. Close the discharge valve and bleed the pressure to 0 bar.
6. Verify zero energy: press START (nothing happens), test for voltage, check temperature.
7. Only then start the work.

> **NEVER**
> Remove someone else's lock, work under a lock you did not apply, or skip the zero-energy check because the job is "only five minutes".

You get your personal red padlock and key on your second day, after the lockout/tagout practical test. The key never leaves your pocket.

> **BY THE END OF THIS CHAPTER YOU CAN**
> Lock out a CX-75 on the training rig while your buddy watches, including the zero-energy check.

CHAPTER 6

The CX assembly line

Every CX unit moves through six stations. Takt time is 38 minutes per station on the CX-75. Each station has its own work instructions on the screen above the bench; always follow the revision on the screen.



Station	What happens there
1 Frame prep	Base frame inspected, anti-vibration mounts fitted.
2 Drive train	Airend and motor mounted, coupling aligned and guarded (manual AM-CX75-03).
3 Cooling	Oil cooler, aftercooler and fan fitted.
4 Piping	Separator tank, oil lines and discharge piping fitted and leak-checked.
5 Electrical	Controller, starter and wiring. Only qualified electricians sign this station off.
6 Test bay	Run-in test, pressure and leak test, final inspection.

Station 2 in short

New assemblers usually start at Station 2. The key points: lift the 68 kg motor with the hoist only, leave a 3 mm gap at the coupling, check alignment with a straightedge before you torque the motor bolts to 85 N·m, and never send a unit on without the coupling guard.

> **BY THE END OF THIS CHAPTER YOU CAN**
>
> Name the six stations in order and explain what leaves Station 2.

CHAPTER 7

Tools and torque

A bolt that is too loose shakes free. A bolt that is too tight stretches and snaps. Every bolt on a CX unit has a set torque, and we tighten every one with a torque wrench.

Using a click torque wrench

1. Check the calibration tag: green and in date. A red or expired tag goes back to the tool crib.
2. Set the torque on the handle scale.
3. Pull smoothly at 90° to the wrench until it clicks. Stop at the click.
4. Mark the bolt head with the yellow paint pen to show it is torqued.
5. Wind the wrench back to its lowest setting at the end of the shift.

Common torques on the CX-75

Joint	Bolt	Torque
Coupling guard to frame	M6	9 N·m
Airend to mounts	M10	49 N·m
Motor to mounts	M12	85 N·m
Separator tank to frame	M16	210 N·m

> **NEVER**
> Use an impact driver for a final torque, or "add a bit extra for luck".

CHAPTER 8

Quality checks

Our target is 98% first-pass yield: 98 of every 100 units pass the test bay without rework. Quality is built in at every station, not inspected in at the end.

The five checks before a unit leaves your station

1. **Right parts:** part numbers match the build sheet.
2. **Right torque:** every bolt torqued and paint-marked.
3. **Nothing left behind:** no tools, rags or loose hardware in the unit.
4. **No damage:** no scratches, dents or pinched cables.
5. **Signed:** your initials on the station sheet.

Defect tags

Tag	Meaning	What you do
Red	Stop. Unit cannot move on.	Call the shift lead now.
Yellow	Fix before test bay.	Note it on the station sheet.
Green	Fixed and checked.	Quality engineer signs.

BY THE END OF THIS CHAPTER YOU CAN

Run the five checks on your station and tag a defect correctly.

CHAPTER 9

The test bay

Every unit runs for 45 minutes in the test bay before it ships. The test bay is a hearing-protection zone, and only certified testers start units. In your first 90 days you watch, help and learn to read the results.

What the run-in test checks

Check	Pass
Working pressure	7.5 to 13 bar, as ordered
Discharge temperature	Below 95 °C after 45 minutes
Vibration at the motor	Below 4.5 mm/s
Leaks	No bubbles with leak spray on every joint
Noise	Below the label value, at 1 m

High vibration at the motor usually means a misaligned coupling. That is why the straightedge check at Station 2 matters so much.

> **BY THE END OF THIS CHAPTER YOU CAN**
>
> Read a test sheet and say whether a unit passed.

CHAPTER 10

5S at your station

A clean, ordered station is faster and safer. We use 5S, and every station is audited once a week.

Step	At your station
Sort	Only what you need for this station's job. Everything else goes back.
Set in order	Every tool has a marked place on the shadow board.
Shine	Wipe the bench and sweep the floor at the end of every shift.
Standardize	Same layout on every shift, as shown in the station photo.
Sustain	The weekly audit score goes on the line board.

An empty space on the shadow board is a question: where is that tool? Find it before the unit moves on. A spanner left inside a compressor can destroy it on its first start.

> **BY THE END OF THIS CHAPTER YOU CAN**
>
> Set up and close down your station to the standard in the station photo.

CHAPTER 11

Reporting and the Corvex Safety app

A near miss is a free lesson. Every one we hear about is an injury we can prevent.

When something goes wrong, or nearly does

1. **Stop** the job. You have stop-work authority.
2. **Make safe,** only if you can do it without risk.
3. **Tell** your shift lead right away.
4. **Log** it in the Corvex Safety app before your shift ends.

The Corvex Safety app

You get access on your first day. Use it to log near misses and hazards, with a photo if you can. It works in English, Polish and Spanish. You can stay anonymous if you prefer.

Injuries

Report every injury, however small, to your shift lead before you leave. A cut that is not reported cannot be treated or learned from. For an emergency, call **2222** from any phone.

> **OUR PROMISE**
> Nobody is ever blamed for reporting. Ever.

CHAPTER 12

Your certification path

You become a certified Level 1 assembler in about 90 days. Each stage ends with a sign-off by your buddy and your shift lead.

When	Stage	To pass
Day 5	Safety ready	Safety induction and lockout/tagout practical passed. Chapters 1 to 5 signed.
Day 30	Station 2 with a buddy	Build 10 drive trains with your buddy, zero red tags.
Day 60	Station 2 on your own	Build 20 drive trains alone, first-pass yield 98% or better.
Day 90	Level 1 certified	Shadow two more stations. Final review with the shift lead.

After Level 1 you can train for Level 2 (three stations) and Level 3 (buddy and tester). Each level comes with a pay step.

> **TIP**
>
> Ask your shift lead for your training record any time. It lives in the Corvex training system, and you can see it on your phone.

CHAPTER 13

Glossary

Airend	The heart of the compressor: two screw rotors in a housing that compress the air.
Coupling	Joins the motor shaft to the airend shaft. Two hubs with a rubber spider between them.
Spider	The star-shaped rubber insert in the coupling. It absorbs shock and small misalignment.
Separator	Tank that spins the oil out of the compressed air.
Anti-vibration mount	Rubber mount between a machine and the frame.
Lockout/tagout	Isolating every energy source with a personal lock and tag before servicing. SOP-MNT-014.
Zero-energy check	Proving a unit cannot start or release pressure before you touch it.
bar / PSI	Units of pressure. 1 bar is about 14.5 PSI.
N·m	Newton-metre, the unit of torque.
Takt time	The time each station has for one unit: 38 minutes on the CX-75.
First-pass yield	Share of units that pass the test bay without rework. Target 98%.
5S	Sort, set in order, shine, standardize, sustain.

CHECKLIST

Onboarding sign-off

Chapter	Buddy	Shift lead	Date
1 Corvex and how a compressor works			
2 Your first week			
3 People, shifts and your buddy			
4 Safety on the shop floor			
5 Lockout/tagout (practical)			
6 The CX assembly line			
7 Tools and torque (practical)			
8 Quality checks			
9 The test bay			
10 5S at your station			
11 Reporting			
12 Level 1 certification			

Hand this page to the People team when it is complete. A copy goes in your training record.