CX-75 ROTARY SCREW COMPRESSOR

Drive train assembly

Mounting the motor to the airend

7 steps | 2 people | 45 min | Shop hoist

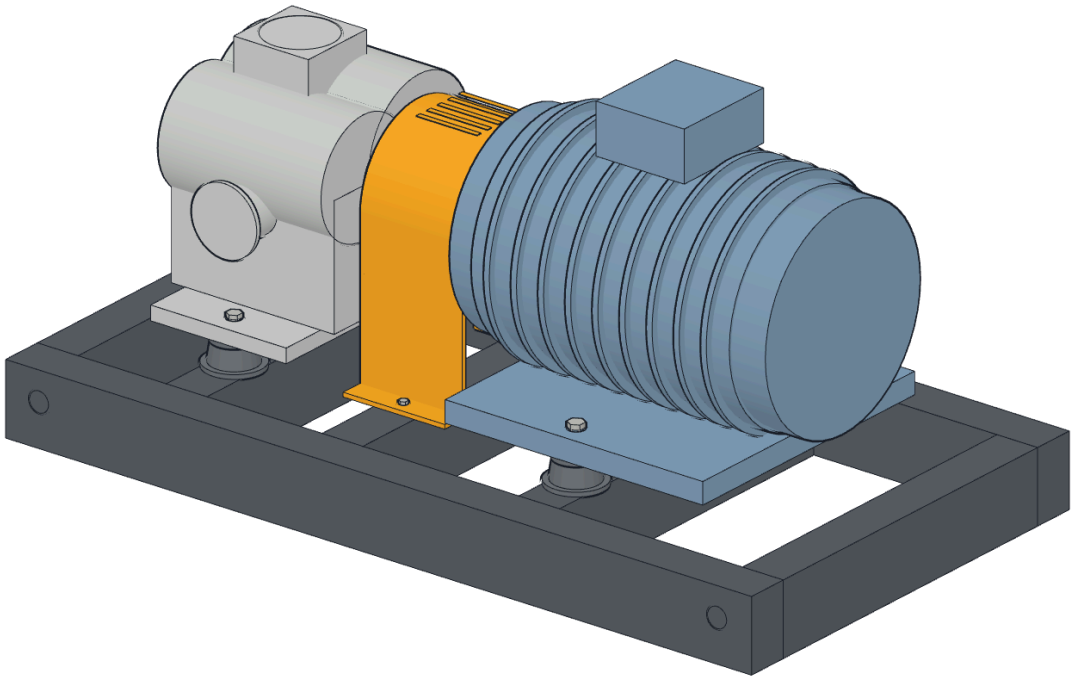

BEFORE YOU START
Lock out the test bay and the assembly station as described in SOP-MNT-014. The motor weighs 68 kg: lift it with the shop hoist, never by hand.

PARTS

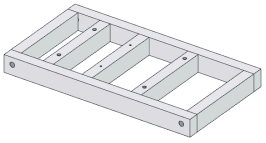

BF Base frame ×1

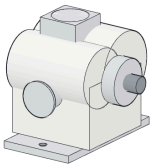

AE Airend ×1

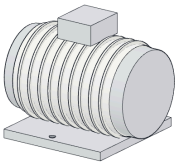

MT Motor, 75 kW ×1

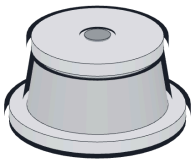

AV Anti-vibration mount ×4

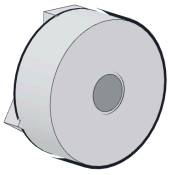

CP Coupling hub ×2

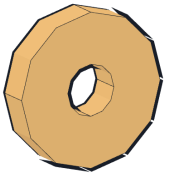

CS Coupling spider ×1

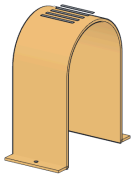

CG Coupling guard ×1

HARDWARE



B10 Hex bolt M10 × 40 ×2

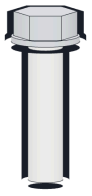

B12 Hex bolt M12 × 50 ×2

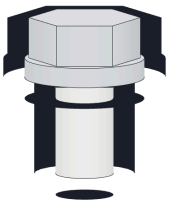

S6 Hex screw M6 × 12 ×2

TOOLS

Tool	Used in
Torque wrench 5 to 100 N·m, 10 / 17 / 19 mm sockets	Steps 2, 6, 7
Steel straightedge, 400 mm	Step 6
Shop hoist with lifting strap, min. 250 kg	Step 5

1 Fit the mounts

Push the four (AV) anti-vibration mounts into the holes in the (BF) base frame, wide metal plate down.

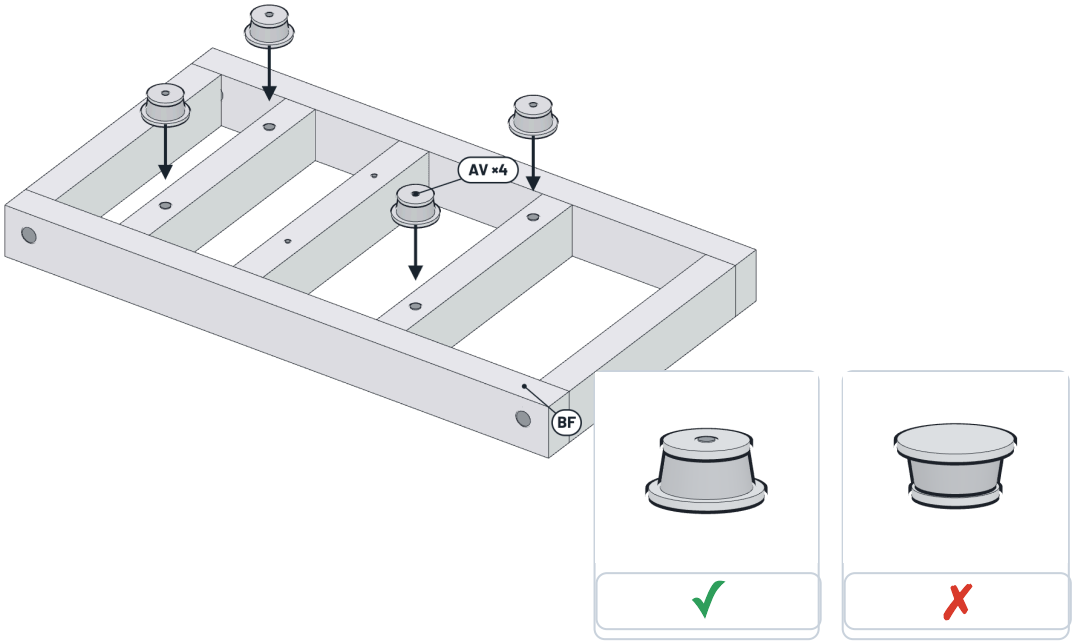

2 Mount the airend

Lower the (AE) airend onto the left pair of mounts, shaft pointing right. Fit two (B10) bolts and tighten to **49 N·m**.

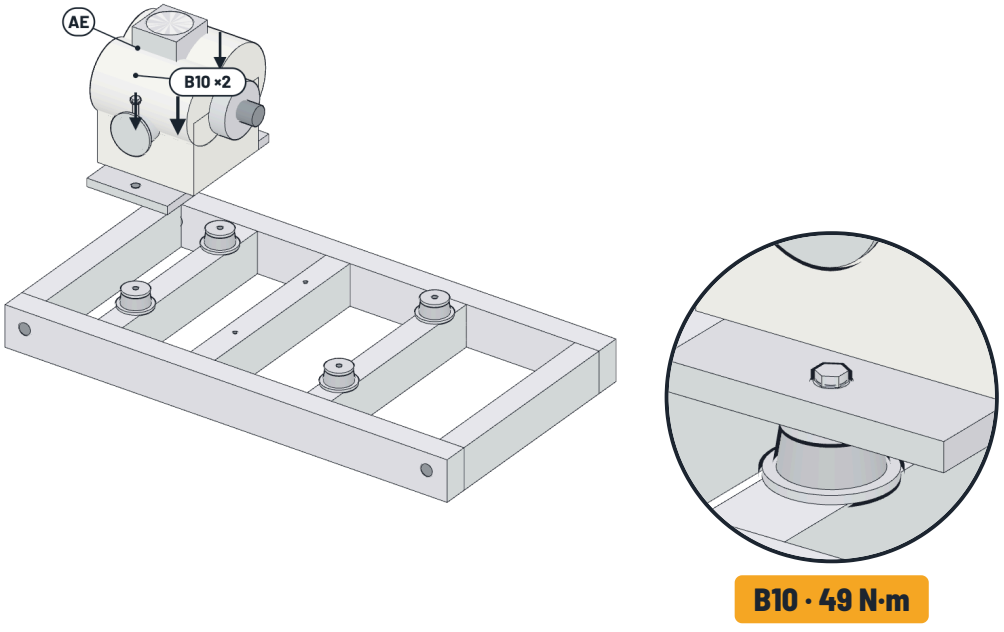

3 Fit the first hub and the spider

Slide one (CP) coupling hub onto the airend shaft, jaws facing out. Press the (CS) spider into the jaws.

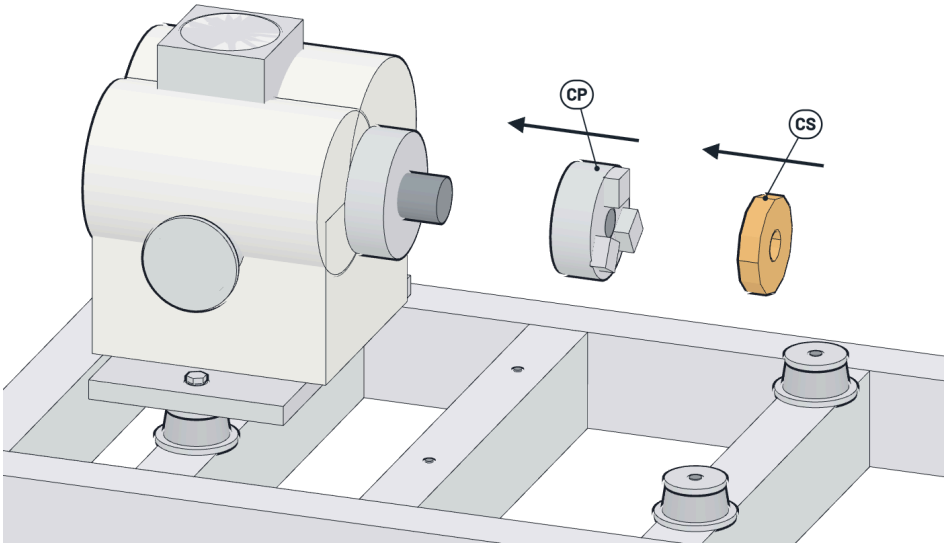

4 Fit the second hub

Stand the (MT) motor on the floor. Slide the second (CP) hub onto the motor shaft, jaws facing out.

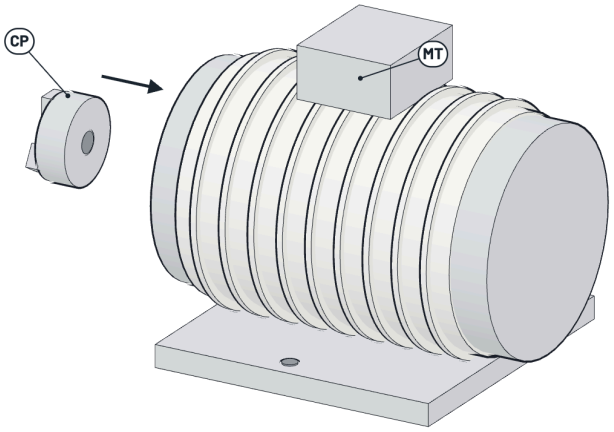

> ⚠ **CAUTION** Never hammer a hub onto a shaft: it damages the bearings. If it is tight, warm the hub to 80 °C.

5 Lower the motor

Lift the (MT) motor with the hoist and lower it onto the right pair of mounts. Engage the hub jaws in the spider, leaving a **3 mm gap**.

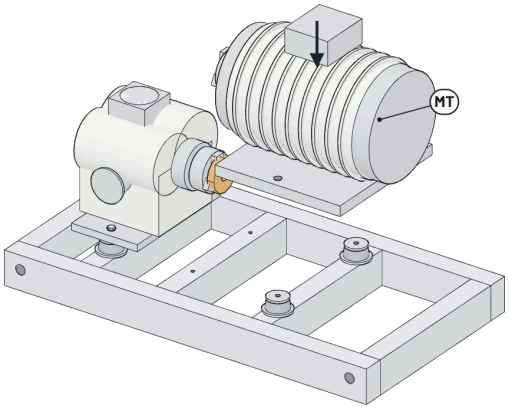

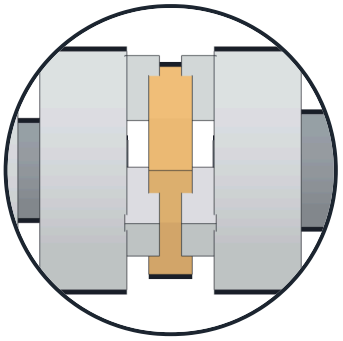

Gap 3 mm

WARNING The motor weighs 68 kg. Use the hoist and never stand under the load.

6 Align and bolt the motor

Fit two (B12) bolts through the motor feet, hand tight. Lay a straightedge across both hubs: it must touch both along its length. Then tighten to **85 N·m**.

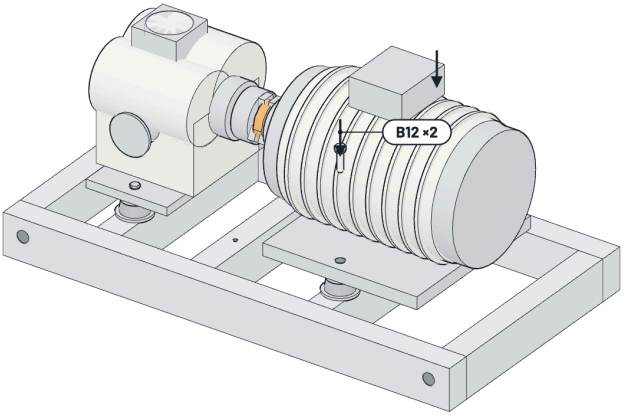

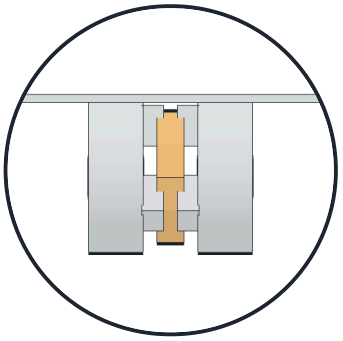

Max. 0.2 mm

7 Fit the coupling guard

Place the (CG) coupling guard over the coupling. Fix it to the frame with two (S6) screws, 9 N·m.

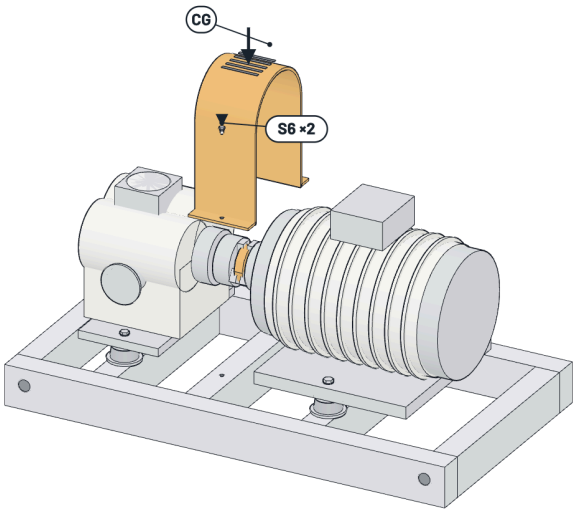

WARNING Never run the compressor without the coupling guard fitted.

Finished

The drive train is ready for the test bay. Remove your lock only after the guard is fitted.

